Exercise 1

Digital Building Block Measurements *(based on the documentation by Prof. Peter Schulz)*

Objectives

- Setup devices and simple circuits using an SSI ICs.
- Perform Measurements and protocol results

General Description

This lab exercise is about measuring the characteristics of simple Boolean logic gates and combinatorial circuits. To this end, 4 different tasks must be carried out, comprise input signal generation and output measurement of an SSI IC by signal generator and oscilloscope means, respectively.

The first lab session is twofold, there is a security advisement. After that, you will have ~45min for completing the tasks. Hence, you have to attend-the session well-prepared to execute all tasks in time.

In this first exercise, no full lab report is needed, just a short protocol (1-3 pages + front page) is sufficient. The protocol must be submitted as pdf via TEAMs no later than one week after the session: Deadline: Thursday 11.59 pm (hard deadline, no extensions possible). No submission will result in a score of 0 points for the whole exercise and team.

Preparation

IC and evaluation board

For the exercise a 7400 IC 4-pin SSL IC is considered, providing the functionality of 4two-input NAND gates. Each gate uses two input pins and one output pin, with the remaining two pins being power (+5 V) and ground

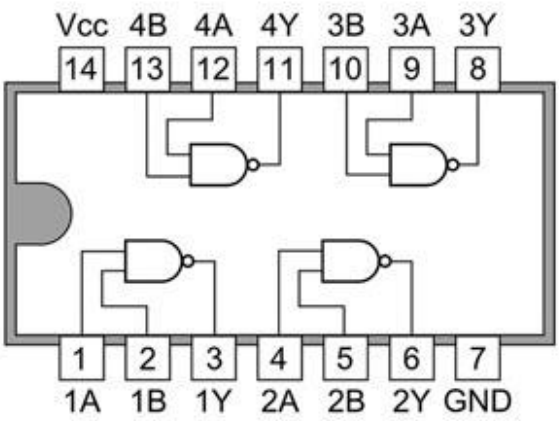

Fig. 1: Pin assignment of a 7400 series IC

To operate the IC during the lab session, the evaluation board is provided:

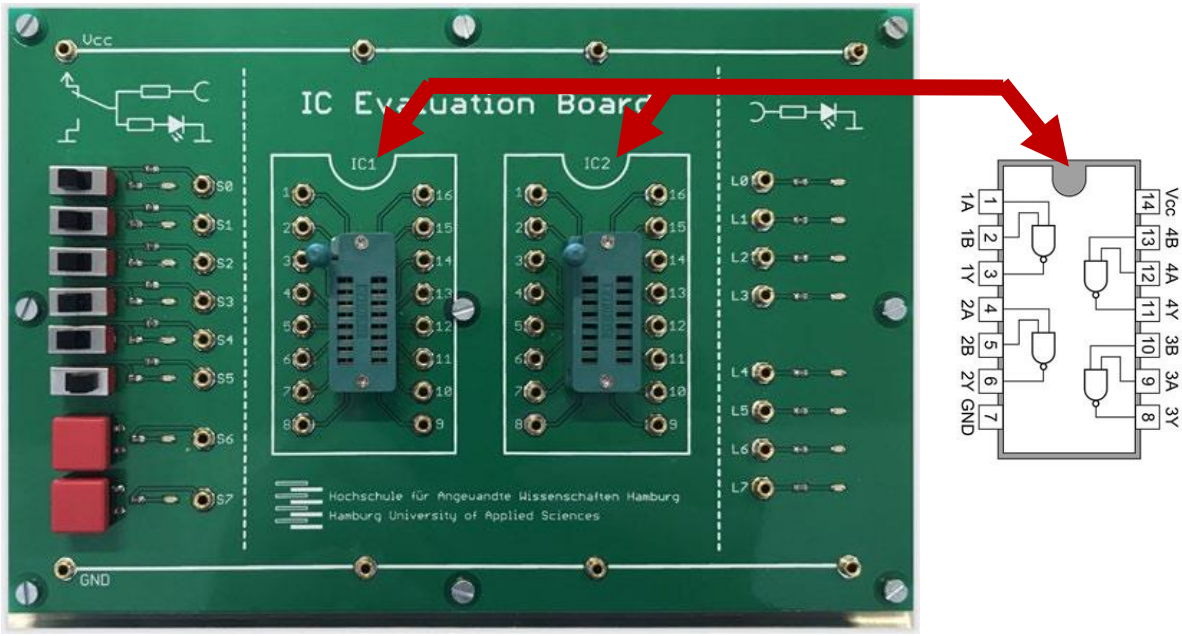

Fig. 2: Evaluation board for the SSI IC (left) and the IC (right). Obey the markings that indicate the correct alignment of the connection between the socket and the IC. **Any non-compliance to this will permanently damage the IC!**

Combinatorial circuitry

The combination of 2 or more NAND gates can be exploited to form other digital building blocks, in particular NOT/INV and OR gates (see Fig. 3).

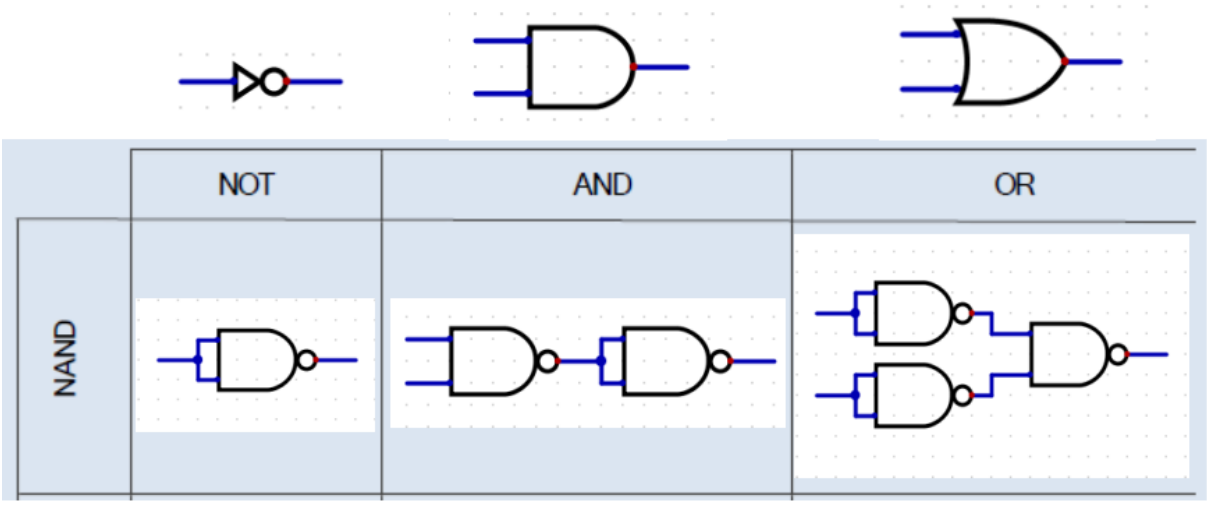

Fig. 3: Equivalent implementation for NOT, AND, OR with NAND only

Probes and function generator

For stimulating and analyzing the logic circuits in this session, a function generator, a power supply unit and an oscilloscope have to be used. A rough overview about all components is given in the following. Please also read the documentation carefully before in advance as this will minimize the risk of unnecessary delays during your session.

For stimulating the logic circuits with the function generator use the prepared terminated coaxial cables only

Fig. 4: Coaxial signal cable with termination resistor (don't disconnect) and connection tips: black to GND, red to CMOS device logic input

Remarks

- the voltage that is measured at the output of the function generator with an oscilloscope might not be the same as shown on the display of function generator
    - Often, it is two times higher
- Usually the function generators is set up assuming the usage of a termination resistor, which is a common practice to reduce reflections in the cable
- The termination resistor has the same value as both the output resistor of the function generator and the characteristic impedance of the cable (here 50Ω).
- The voltage divider created by the output resistor if the function generator and the termination resistor halves the input voltage at the input CMOS circuit

Caution

- No matter whether a termination resistor is used or not, always take a measurement to control the actual output voltage of the function generator at the point where you want to connect it to your digital circuit **before** connecting it to the circuit.
- **Never apply negative voltages to CMOS**
    - This means you have to add an offset to the function generator output value
- Always double check your measurement setup, especially that your input voltage to CMOS-based circuits lies within the range **V_{min}=0V and V_{max}=V_{cc}= 5V**

Tasks

Task 1.1 - Behavior of a gate with static power supply

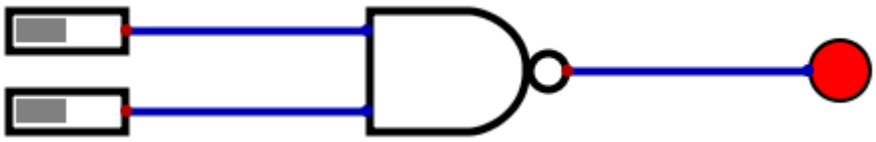

Fig. 5: Experimental NAND setup with switches on the gate inputs and LED on the gate output (logic circuit only, power connection not shown)

- Put one 7400 device into the evaluation board (see Fig. 2).
  Attention: the socket has 16 pins; the chip has 14 pins
- Make sure that you don't exceed the power supply values: GND = 0 V and the Vcc = 3.3 V
- The circuit device requires power connection! (Vcc and GND)
- Assign switches and LED to one of the NAND gates (see Fig. 5).
- Test the NAND gate and protocol the truth table.

Note: Do not disassemble the circuit afterwards because you need it for further lab tasks.

Task 2 - Timing characteristics of a gate

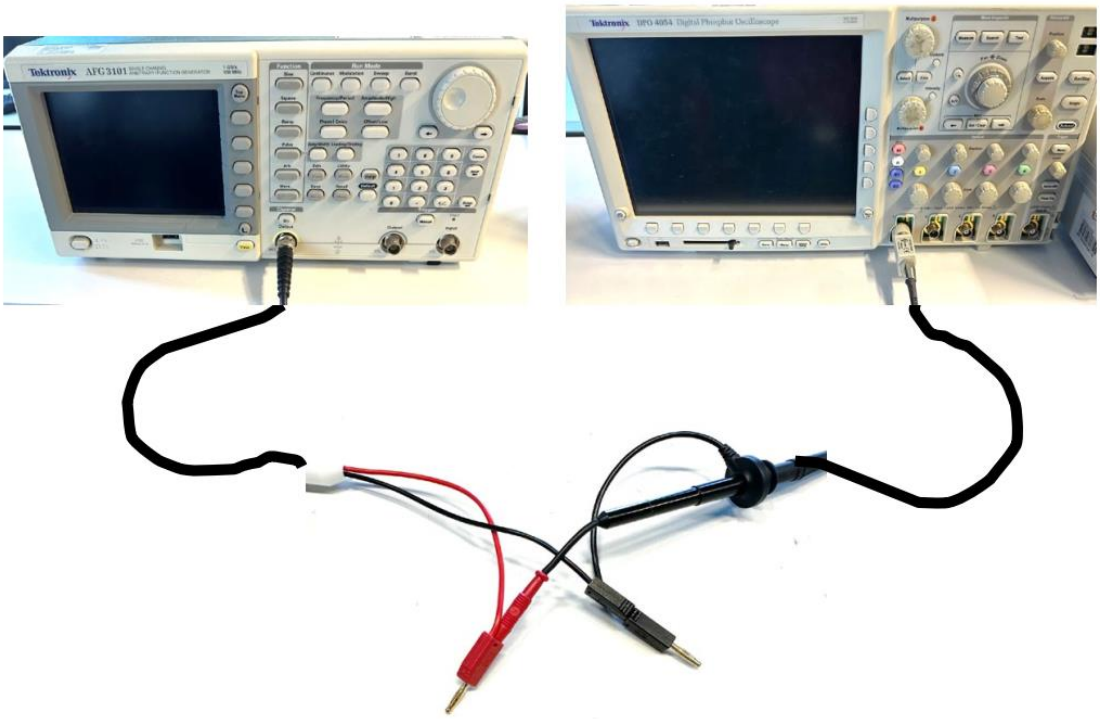

Fig. 5: Check setup for the function generator (left) with an oscilloscope (right)

Task 2.1

- Connect the function generator output to oscilloscope channel one using a terminated cable (see Fig. 5)
  Note: No digital circuit is involved so far
- Perform adjustment of the function generator:
  - frequency: s.th. between 10 and 100 kHz
  - amplitude: 3.3 Vpp (peak-to-peak)
  - offset: output voltage alternates between 0 V and 3.3 V
  - inspect the function generator carefully on the oscilloscope

Task 2.2

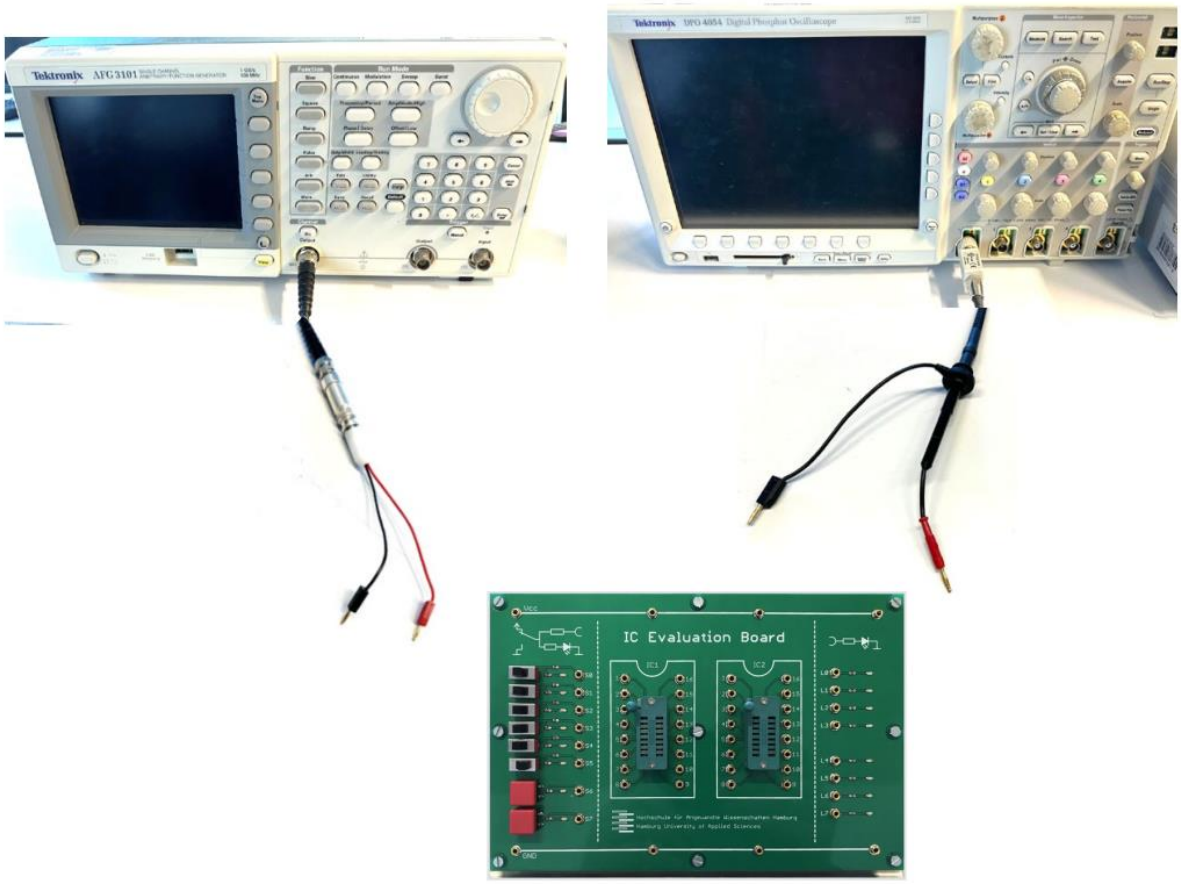

Fig. 6: Setup for stimulating the SSI IC on the evaluation board with the function generator (left) and analyzing the output with the oscilloscope (right)

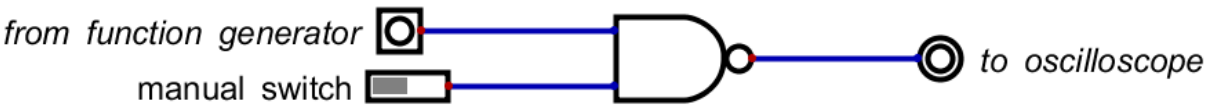

Fig. 7: Circuit for measuring timing characteristics of a gate

- Connect the function generator output via a terminated cable to one of the NAND inputs. Keep one of the switches for the other input of your circuit
  Note: Oscilloscope probe prepared for 8th floor labs. Black: to GND, red: to CMOS device logic output

- Connect the oscilloscope:
  - to channel 1 the function generator signal
  - to channel 2 output of the NAND gate.

Perform measurements:
  - for rise and fall times at the NAND output (regard definition of rise and fall times as explained with Fig. 8)
  - the propagation delay of a rising edge from gate input to gate output (regard definition of propagation delay as explained with Fig. 9)

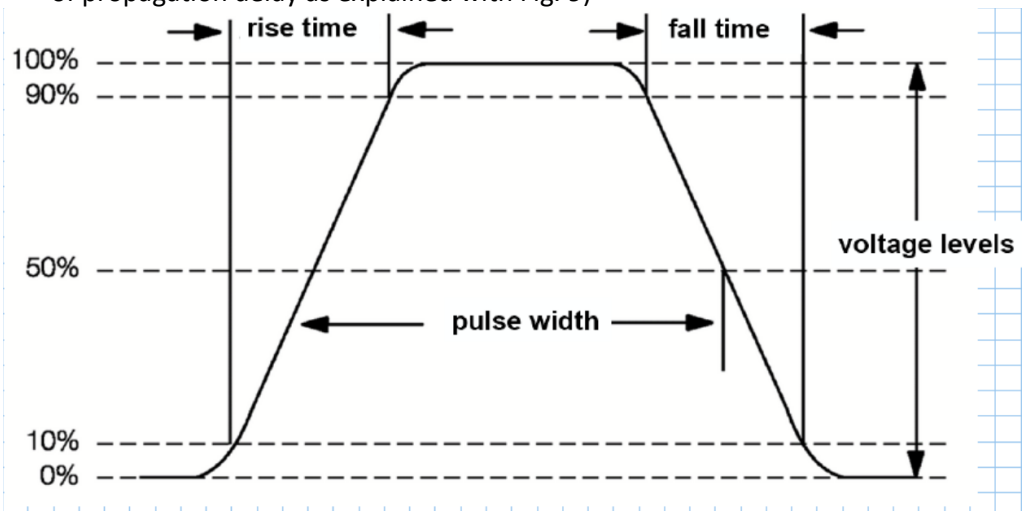

Fig. 8: Measurement of rise time t_r and fall time t_f considering level references of 10% and 90%

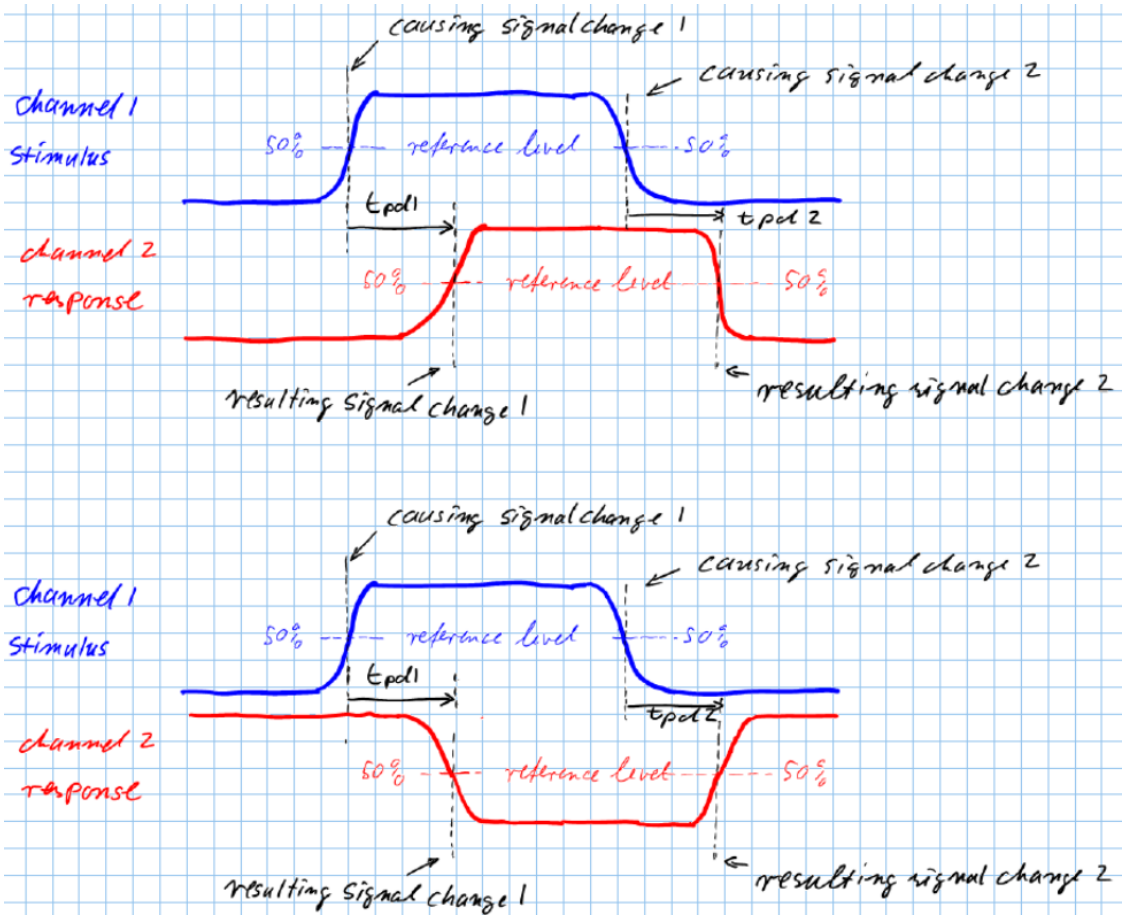

Fig. 9: Measurement of propagation delay t_{pd} upper part: non inverted case

Task 2.3

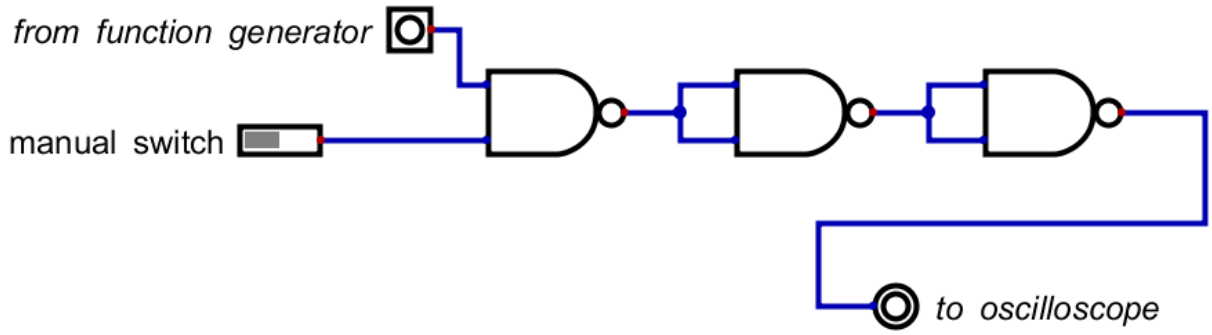

Fig. 10: Setup for further signal propagation measurements

- Extend your circuit according to Fig. 10
- Perform a measurement for the propagation delay of the circuit.
    - Protocol the results
    - Is the propagation delay as expected?

Task 3.1 – Glitch observation

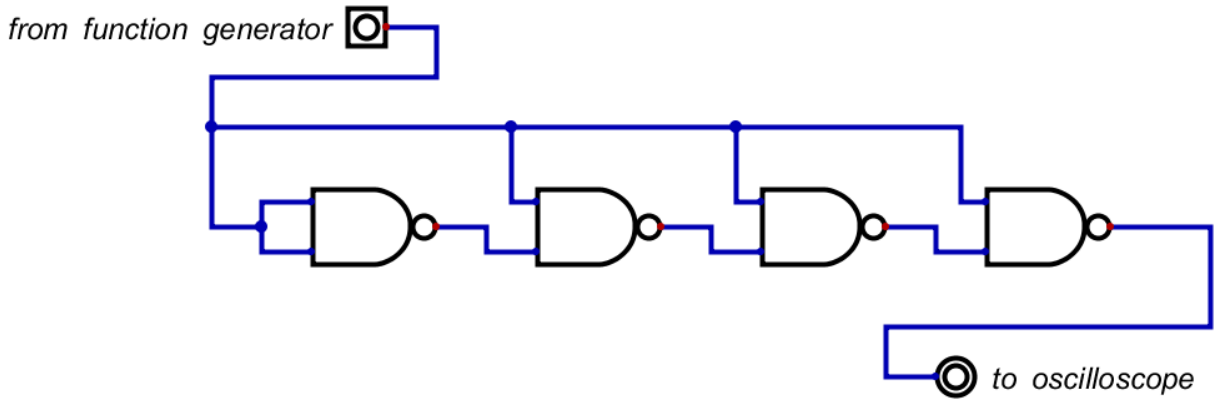

Fig. 11: Setup for glitch measurement

- Modify the circuit according to Fig. 11
- Observe the result on the oscilloscope
    - What do you see?
    - Does it differ between rising and falling edges of the input signal?
    - Try to explain the behavior

Task 4.1 – Combinatorial feedback

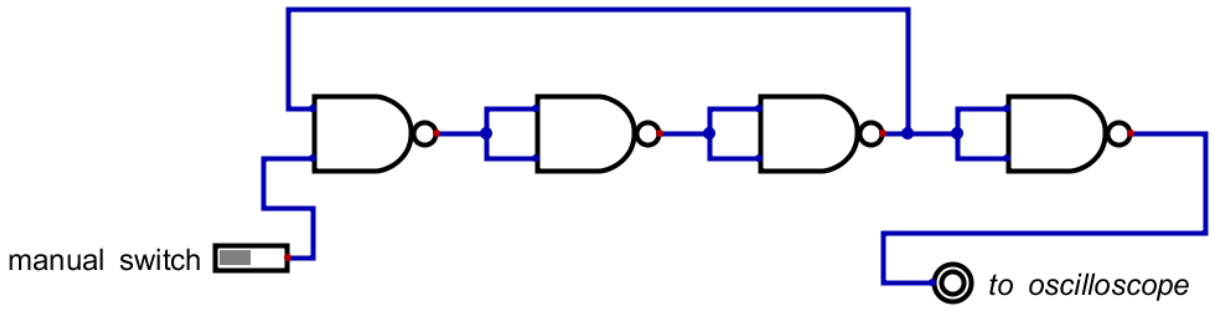

Fig. 12: Setup for combinational feedback

Modify the circuit according to Fig. 12

- No function generator involved!

- Observe the result on the oscilloscope
  - Determine the frequency of the oscillator